FINISH CODES

Clean & Bright - 02

Click on the arrowhead in the box above, select the desired finish and enter the 2-digit code in shaded finish area of the part number below.

FILL IN SHADED AREAS TO COMPLETE THE PART DESCRIPTION

(●) English (inches) ( ) Metric (mm)

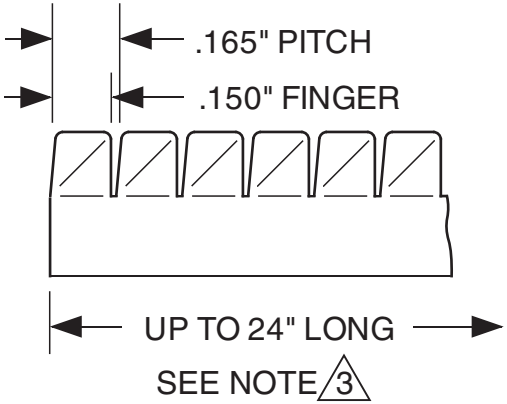

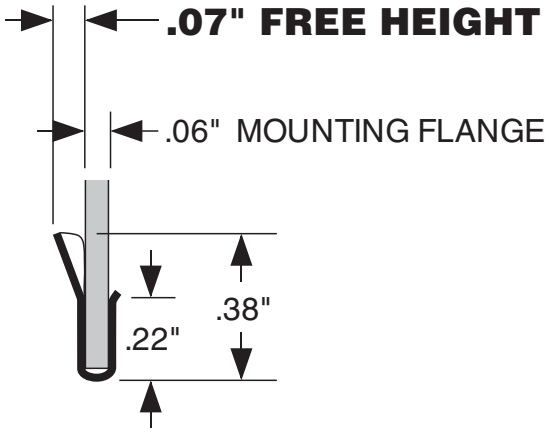

TECH-ETCH MANUFACTURING PART NUMBER

165TC070	-	24	-	
(PROFILE)	-	(LENGTH)	-	(FINISH)

LENGTH CALCULATOR FOR PART NUMBER ABOVE

CLICK HERE (●) FOR STOCK LENGTH,

OR ENTER NUMBER OF FINGERS HERE: 145

NOTES:

1. MATERIAL .003" BeCu, C17200 HARDENED.
2. FINISH: AS SPECIFIED - SEE TOP LEFT.
3. STRIPS MAY BE SUPPLIED CUT TO ANY FULL FINGER INCREMENT. ALLOWED LENGTHS = NUMBER OF FINGERS MINUS SLOT WIDTH.
4. UNLESS OTHERWISE SPECIFIED DIMENSIONS ARE IN INCHES.

UNLESS OTHERWISE SPECIFIED ALL TOLERANCES TO BE: .XX ±.02 .XXX ±.005 .X ±.005/in.	Tech-Etch 45 Aldrin Road, Plymouth, MA 02360 TEL 508-747-0300 • FAX 508-746-9639 sales@tech-etch.com • www.tech-etch.com
SCALE: 200%	CATALOG PROFILE: 165TC070
DATE: 9-26-14	PART NAME: Clip-on Twisted Contacts
CUSTOMER PART NUMBER:	