FINISH CODES

Clean & Bright - 02

Click on the arrowhead in the box above, select the desired finish and enter the 2-digit code in shaded finish area of the part number below.

FILL IN SHADED AREAS TO COMPLETE THE PART DESCRIPTION

English (inches) Metric (mm)

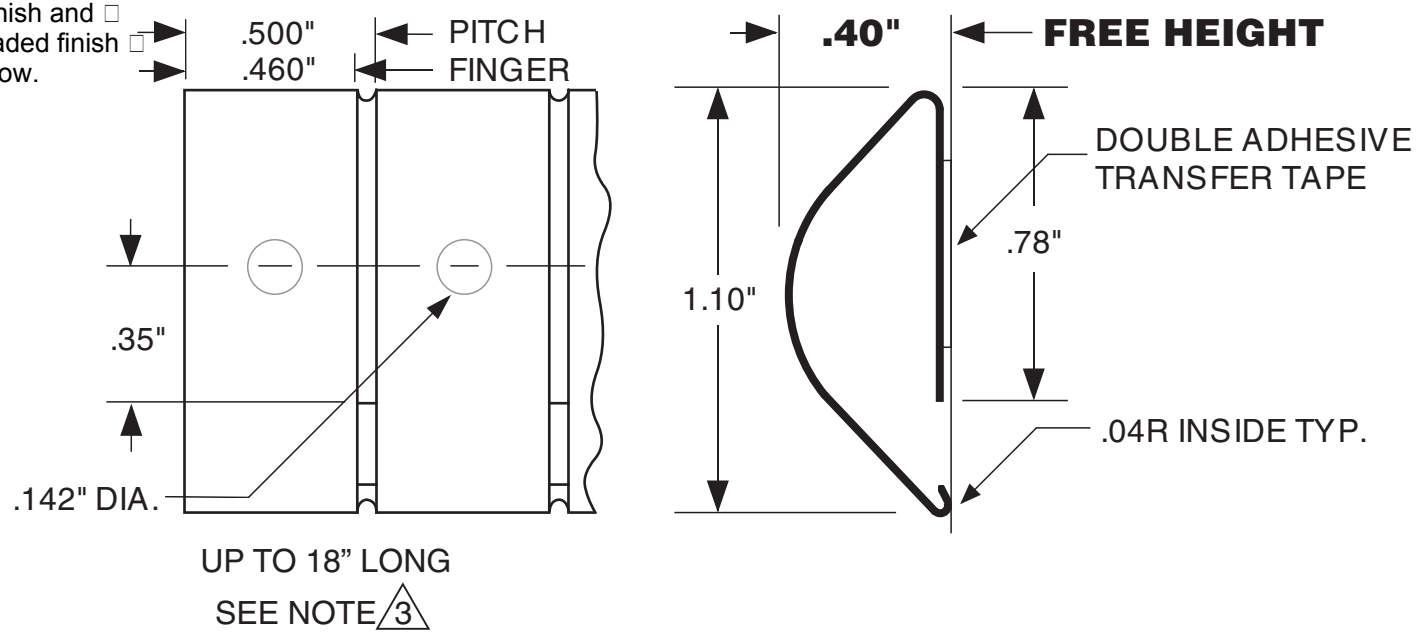

TECH-ETCH MANUFACTURING PART NUMBER

500P110	-	18	-	
(PROFILE)	-	(LENGTH)	-	(FINISH)

LENGTH CALCULATOR FOR PART NUMBER ABOVE

CLICK HERE FOR STOCK LENGTH,

OR ENTER NUMBER OF FINGERS HERE: 36

NOTES:

1. MATERIAL .005" BeCu, C17200 HARDENED.
2. FINISH: AS SPECIFIED - SEE TOP LEFT.
3. STRIPS MAY BE SUPPLIED CUT TO ANY FULL FINGER INCREMENT. ALLOWED LENGTHS = NUMBER OF FINGERS MINUS SLOT WIDTH.
4. UNLESS OTHERWISE SPECIFIED DIMENSIONS ARE IN INCHES.

UNLESS OTHERWISE SPECIFIED ALL TOLERANCES TO BE:
.XX ±.02" .XXX ±.005"
Overall Lengths:
±.005"/in., ±.02" Min.

Tech-Etch
45 Aldrin Road, Plymouth, MA 02360
TEL 508-747-0300 • FAX 508-746-9639
sales@tech-etch.com • www.tech-etch.com

SCALE:	CATALOG PROFILE:
200%	500P110
DATE: 9-26-14	PART NAME: Stick-on Soft No-snag Fingers

CUSTOMER PART NUMBER: